Reference Source no.	
Project number	956840
Date of issue	18 July 2008
Security Code	

Review of recent experience throughout Europe on upgrading of roof systems in steel including creation of habitable spaces

ROBUST Project: WP 4.1 and 4.2

Author(s):
Israel Adetunji

Corus Research, Development & Technology
Swinden Technology Centre
ICA
Moorgate
Rotherham
South Yorkshire S60 3AR
United Kingdom

T 01709825537

Initial circulation list

<<Name>> <<Name>> <<Name>>
<<Name>>
<<Name>>
<<Name>>

<<Feel free to add or delete columns in the table above>>

<<Careful, NEVER use textcolumns here! Textcolumns use section breaks, and sections can offset the page numbering!>>

<<Type the initial list. Some people on the circulation list may not require a full copy of the report, in this instance a summary page only, may be provided. Recipients of a summary page will be indicated by an asterisk (*) on the circulation list. Colour copies may also be restricted. Recipients of colour copies will be indicated by a plus (+) on the circulation list.>>

Security Code

Contents **Page**

1. Introduction 1

2. Systems Overview 1
2.1 Overview of Systems Reviewed 2

3. Steel Roofing Systems 3
3.1 Hi-Point 3
3.2 Gus Truss / Nu Truss 5
3.3 Dibsa 7
3.4 Capella Pin Truss 9
3.5 Capella Vierendeel Truss System 11
3.6 AyrTruss 12
3.7 Ashjack 13
3.8 Fusion Building Solutions 15
3.9 Rosette 17
3.10 Metsec Trusses 19
3.11 Cover Structure 21

4. Other Products / Systems of Interest 23
4.1 Freeframe 23
4.2 AyrFrame 24
4.3 Moment Frame 25
4.4 Opstalan 28
4.5 Lett-Tak 29
4.6 Smartroof 30
4.7 Europe TwinTile / Kingspan Panel Systems 31
4.8 Cool Roof Tiles 32
4.9 Urban Roof 33

5. Related Research in Europe 34
5.1 Prefabricated Systems for Low Energy Renovation of Residential Buildings 34

6. Conclusion and Recommendation 36

Reference 38

Summary

Review of recent experience throughout Europe on upgrading of roof systems in steel including creation of habitable spaces

ROBUST Project: WP 4.1 and 4.2

Author(s): Israel Adetunji

Reviewer(s):
Date of issue: 13 May 2010
Version no:
Security Code:

A study into the use of lightweight steel roof systems suitable for new build and refurbishment of existing roofs has been conducted. Systems, both steel intensive and other materials, capable of providing a habitable space within the roof void have been included to enhance the understanding of the state of the art within Europe and to facilitate knowledge transfer. Similarly, the study briefly touched on a highly relevant and ongoing research project focusing on prefabricated systems for low energy renovation of residential buildings for completeness. The need for this investigation has arisen as part of the RFCS funded ROBUST project to further develop the use of steel intensive solution for refurbishment of existing buildings.

The breadth of the systems reviewed (Table 1) can be broadly categorised as:

- Modularised lightweight steel
- Panelised lightweight steel trusses
- Panelised composite lightweight steel panel or structural insulated panel (SIP)
- Moment resisting lightweight steel frame
- Novel roof tile/profile systems

The main findings of the review were that the majority of the steel intensive solutions in the market are mainly geared toward new build and refurbishment of existing building in terms of over roofing and conversion of flat-to-pitch roofs. These systems are mostly panelised lightweight steel trusses. Only two of the systems reviewed are prefabricated modular systems (Hi-Point and AyrFrame). The configurations and spacing of these trusses prohibit the provision of a room-in-roof solution. There is a need for market research into the reasons for sparse availability of steel systems for creation of habitable roof for refurbishment application. Other non-truss systems have merits in terms of creating a habitable space for refurbishment. However they are generally disadvantaged by the spans they offer. There are opportunities for knowledge transfer in the use of composite timber cross walls for creating habitable roof. Concerning relevant research project, collaborative activity is strongly recommended with the Annex 50 research project focusing on “Prefabricated systems for low

Corus Research, Development & Technology
Swinden Technology Centre
ICA
Moorgate
Rotherham
South Yorkshire S60 3AR
United Kingdom

energy renovation of residential buildings (covering roof, HAV, Solar and façade systems)".

Customer: RFCS
Programme manager: Simon Vaughan

Approved by: Samir Boudjabeur

Review of recent experience throughout Europe on upgrading of roof systems in steel including creation of habitable spaces

1. Introduction

The aim of this report is to review recent experience throughout Europe on upgrading roof systems in steel including creation of habitable spaces. In light of this, the report investigates the methods and lightweight steel systems currently available for roof refurbishment, over-roofing, and creating a room-in-roof. This scope is extended to cover systems that offer the conversion of flat roofs to pitch roofs in order to provide a holistic appraisal of the breadth of options available when considering the improvement/upgrading of existing buildings.

The report provides a brief overview of each of the system in terms of application, product and technical description, methods of assembly, types of finishes, suitability and examples of case studies (Section 3). A total of fourteen steel intensive roof systems and two steel roof profile/tile systems are covered. In addition, three timber systems which demonstrate a novel approach to habitable roof spaces are documented for the purpose of knowledge transfer (Section 4). An ongoing research project focusing on prefabricated systems for low energy renovation of residential buildings is included for the purpose of collaboration (section 5). Finally, conclusions and recommendations are presented in the last section (section 6).

2. Systems Overview

The general systems for over roofing and creating habitable space are prefabricated 2D panelised or 3D modularised systems. The current market place for lightweight steel roof systems can be described as a developing market that has come about through the extensive use of lightweight steel wall framing systems. For this reason the technologies utilised in prefabricated roof systems such as the fixing and forming methods can be directly related to existing technology.

The UK has recently seen a host of refurbishment projects that have utilised the advances in lightweight steel technology to design, fabricate and install pitched roofs to aging flat roofs. The creation of a habitable space within roof voids has historically been achieved by retrofitting insulation and plasterboard to traditional timber pitched roofs, in effect converting a cold roof to a warm roof. In view of this, the ability to create a warm roof using prefabricated lightweight steel sections for new build and refurbishment must not been overlooked by manufacturers and roofing suppliers.

A list of the systems reviewed is presented in Table 1. The breadth of the systems covered herein can be broadly categorised as:

- Modularised lightweight steel trusses
- Panelised lightweight steel trusses
- Panelised composite lightweight steel panel or structural insulated panel (SIP)
- Moment resisting lightweight steel frame
- Novel roof tile/profile systems

2.1 Overview of Systems Reviewed

Table 1: Lists of roofing systems reviewed

System Name	Company	Type	Country	Feature/ differentiator	Onsite/ Offsite	Application			Suitability		
						Residential	Commercial	Industrial	Room in roof	Over roofing	New build
Hi-Point	Corus Plc	Modular	UK	Fully assembled in factory or at ground level, lifted onto roof	Offsite	x	x			x	x
Gus Truss/ NuTruss	Gus Truss Nucon Steel	Truss	USA Finland	Adjustable column splice. Unique profile section	Onsite	x	x			x	x
Dibsa	Dibsa Structures	Truss	UK	Top-hat section	On-/ Offsite	x	x			x	x
Capella Pin Truss System	Kingspan	Truss	UK	On-site adjustability	Onsite	x	x			x	x
Capella Vierendeel Truss System	Kingspan	Truss	UK	Spans up to 30m	Onsite	x	x			x	x
AyrTruss	Ayrshire Steel Framing	Truss	UK	Welded, off-site manufacture.	Offsite	x	x			x	x
AshJack	Ash and Lacy Building Systems	Truss	UK	Adaptable system	Offsite	x	x			x	x
Fusion Building Solutions	Fusion Building Solutions	Truss	UK	Bespoke sections	Offsite	x					x
Rosette	Rosette Systems Ltd	Truss	Finland	Bespoke connection system	Offsite	x					x
Metsec Trusses	Metsec Plc	Truss	UK	Long span up to 34m	Onsite	x	x	x		x	x
Cover Structure	Cover Structure	Truss	UK	Flat-to-pitch conversation	Offsite	x	x			x	x
Freeframe	Banro Sections Ltd	Truss	UK	Automated system	Offsite						x
AyrFrame	Ayehire Steel	Modular	UK	Welded,	Offsite	x	x		x	x	x
MomentFrame	Ayehire Steel		UK	Bespoke connection	Onsite	x	x	x	x		
Opstalan *	Opstalan BV	Panel	Nether-lands	Panelised system	Offsite	x	x		x		x
Lett-Tak *	Lett-Tak	Truss/ Panel	Norway	Hybrid truss/ panelised steel system	Onsite			x			x
SmartRoof *	SmartRoof Ltd	Panel	UK	Timber roof. Room-in-roof	Onsite	x			x	x	x
TwinTile *	Europe TwinTile	Steel tile	Belgium UK	Novel use of steel to mimic traditional tiles	Onsite	x	x	x	x	x	x
Cool Roof / Urban Roof	Corus Plc	Steel profile	USA UK	Reduce heat	Onsite	x	x	x	x	x	x

Note: * = Systems that are somewhat disparate to the aims of ROBUST. However, they are included in this report in order to highlight new or transferable technologies from outside the light weight steel construction sector.

3. Steel Roofing Systems

This section provides a brief overview of the roofing systems (see Table 1) in terms of application, technical description, methods of assembly, types of finishes, suitability for habitable space and examples of case studies.

3.1 Hi-Point

Supplier: Corus Group plc www.corus-hipoint.com

Application: Hi-point is an offsite manufactured roofing system that distributes loads uniformly or concentrated at various locations (Figure 1 and 2). The system is a non-spanning roof system. Hi-point is typically suited to multi-occupancy residential and commercial buildings. It is suitable for new building as well as refurbishment especially conversion of flat-to-pitch roofs.

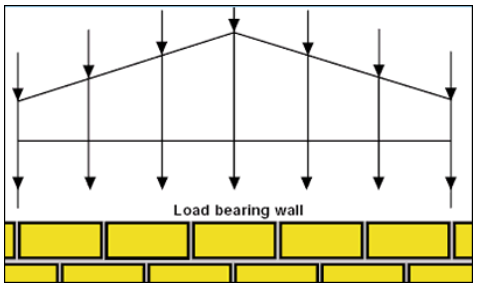

Figure 1: Load bearing diagram showing theoretical load distribution

Figure 2: Elevation view of Hi-point roof system showing load distribution paths

Product description: The Hi-point system is constructed using lightweight steel C sections and lipped C sections with swaged ends where required. Sections are screwed together with self-drilling tapping screws to form a panelled system to which purlins are attached and then covered with the required roofing material to form a module. The roof geometry can be designed to suit the client's requirements and is available in three permutations, mono-pitch, duo-pitch and barrel vault, as shown in Figure 3.

Figure 3: Hi-point Mono-pitch, Duo-pitch and Barrel vault roof geometry.

Technical description: Design parameters of the Hi-point system are limited by the width and height restrictions of road transportation and therefore the flexibility of the system can be utilised to a greater degree if on-site construction of the roof system is undertaken. The spacing of the trusses is generally 3m. The overall design parameters are shown in Table 2. Pitch requirements and the compatibility of different roofing materials are shown in Table 3

Type of roof	Condition	Design parameters - module: Span (m) ≤ 4.0	Span (m) > 4.0	Angle (°) ≤ 30	Angle (°) > 30	Height Ht (m) ≤ 3.2	Height Ht (m) > 3.2
Mono-pitch	Off-site	✓	X	≤ 15	X	✓	X
	On-site	✓	✓	✓	✓	✓	✓
Duo-pitch	Off-site	✓	X	✓	X	✓	X
	On-site	✓	✓	✓	✓	✓	✓
Barrel vault	Off-site	✓	X	✓	X	✓	X
	On-site	✓	✓	✓	✓	✓	✓

Table 2: Design parameters

Roof covering	Mono-pitch Warm	Mono-pitch Cold	Duo-pitch Warm	Duo-pitch Cold	Barrel vault Warm	Barrel vault Cold
Kalzip	1.5°	1.5°	1.5°	1.5°	✓	✓
Traditional metals	5°	5°	5°	5°	✓	✓
Membrane (flat roof)	5°	X	5°	X	X	X
Superdeck	1°	X	1°	X	Transverse only	X
Trapezoidal	5°	5°	5°	5°	✓	✓
Metal tile	15°	15°	15°	15°	X	X
Concrete tile	22.5°	22.5°	22.5°	22.5°	X	X

Table 2: Pitch requirements and roof coverings

Assembly: Hi-point is available as a factory built complete unit delivered to site, ready to be installed at roof level or assembled at ground level and craned into position with all the components required for the finished roof e.g. guttering and fascias. This is enabled by the relatively light weight system used to construct the roof and the provision of adequate lifting points. The ground level assembly of Hi-point reduces working at height and overcomes size restrictions imposed by transportation.

Finishes: Hi-point can be covered in a range of finishes including self supporting and fully supported standing seam, composite panels, trapezoidal profiles, metal roof tiles or can be prepared to receive traditional roof tiles.

Suitability: The system is mainly designed for new build and refurbishment i.e. over roofing. The suitability of the Hi-point system to provide a habitable space within the roof void is possible but limited because of the spacing of the truss. For a habitable space to be created it is likely that the system would require some alterations to provide extra rigidity. The space available for habitation would be limited as the roof panels and framework would form a restricted floor area. In theory if the design of the system was optimised to reduce the number of load bearing panels, it could offer the possibility to provide 4m wide by up to 6m structural member free area on plan. This would require structural sections to be made from thicker gauge galvanised steel, furthermore height considerations would need to be made at the design stage to fully utilise the internal space.

Case Studies: Hi-Point by Corus has already been successfully implemented in a number of refurbishments and new build projects:

- The new Unity development of 27 storeys luxury apartments in Liverpool equipped with a striking 1.5 degree pitched Hi-Point gull wing roof, which sits 94 metres above the ground. The full 22 Hi-Point modules were lifted and bolted into position in just two days
- As part of the MOD ten years improvement project “Project SLAM” (Single Living Accommodation Modernisation)

3.2 Gus Truss / Nu Truss

Supplier: Nucon Steel www.nuconsteel.com,
Gus Truss Ltd www.gustrussfl.com

Application: This system is based on a conventional truss design but has the advantage of a unique splice system. Figure 4 shows a typical installation of the roof truss system. The system finds its application in low and medium rise multi-occupancy residential and various commercial buildings.

Product description: The system is a steel manifestation of traditional timber truss systems, and requires working at height as the truss is built at ground level and craned to roof level with additional work at height to install the roof finishes. Therefore the remaining battening and fixing of the roofing material is conducted in-situ (Figure 7).

Figure 4: Typical roof truss installation. Nutruss by Nucon Steel

Technical description: The Nutress system utilises a bespoke section design and splice connection (Figure 5). The splice consists of a smaller height section that is inserted into the larger chord section and bolted together. This is claimed to reduce waste and allow for faster construction of the trusses. The system uses bolted connections, which require the pre-drilling of the chord sections prior to installation of the fixing. Due to the nature of the system it has a spanning capability of up to 22m and spaced at 1.2m apart.

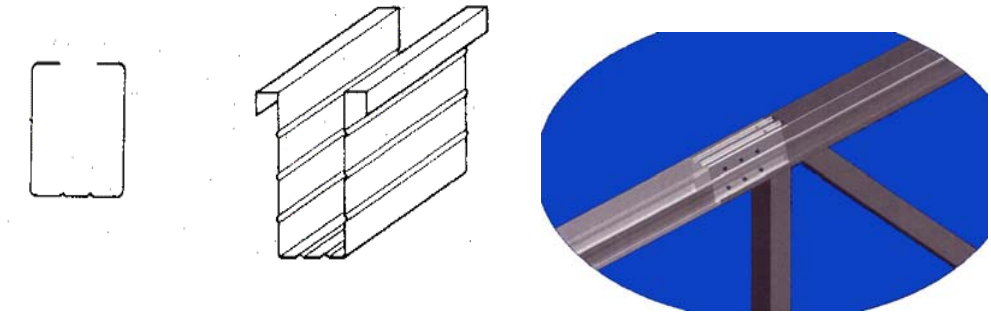

Figure 5: (left) Splice connection section view and (right) bespoke Nutruss profile section.

Assembly: The system is formed, cut and assembled into trusses on site at ground level and craned to roof level with additional work at height to install the roof finishes. The production of the system on site is facilitated by portable equipment capable of forming, cutting and machining the profiles from coils of galvanised light gauge steel. This is a novel approach which enables precise manufacturing of the trusses adjacent or nearby the installation point (Figure 6).

Figure 6: On site truss manufacturing system. Nucon steel.

Finishes: A range of finishes including self supporting and fully supported standing seam, composite panels, trapezoidal profiles, metal roof tiles and traditional roof tiles are possible.

Suitability: The system is mainly designed for new build and refurbishment i.e. over roofing. It requires structural alteration for creating room in the roof as the truss design and truss spacing limit the available space and the available headroom.

Case Studies: An example of the Nutruss system on large a residential development. The high pitch of the roof can be seen and the entire roof structure awaits installation of the roof covering.

Figure 7: Truss system installed and awaiting roof covering

3.3 Dibsa

Supplier: Dibsa Structures Limited www.dibsa.co.uk

Application: Dibsa is an over-roofing or flat-to-pitch conversion (Figure 8) solution. It is suitable for use on new buildings or as part of renovation works. The system is designed, supplied and manufactured in-house and caters for the residential and commercial markets.

Figure 8: Flat-to-pitch conversion and over-roofing using the Dibsa system

Product description: The system is constructed using lightweight steel “L” and “top hat” sections bolted in a truss configuration. Trusses are capable of spans of up to 12m and are also available in a non-spanning continually supported format. Typical truss spacing is in the range of 300mm to 900mm depending on the type of roof covering.

Technical description: The connections are made with bolts and offer on site adjustment if required. Each truss frame comprises of a 'top hat' section base member, height adjustable struts, brace members and 'top hat' section rafter members (Figure 9).

Figure 9: View of roof soffit and facia members. (Centre) View of adjustable riser. (Right) view of typical bolted connection

Assembly: Dibsa is supplied either a kits or in prefabricated format, without finishes, ready to be craned on top of the building. Finishes are applied on site at height.

Finishes: Roof coverings are typically specified from external sources allowing a host of surface finishes and roof construction methods depending on environmental demands and requirements.

Suitability: The system is mainly designed for new build and refurbishment i.e. over roofing. It requires structural alteration for creating room in the roof as the truss design and truss spacing limit the available space and the available headroom.

Case Studies: Installation of the Dibsa truss system to upgrade from flat to pitch roof in Leeds UK. Figure 10 shows the existing roof prior to upgrade. Viewed along the ridge line Figure 11 indicates the typical truss spacing and Figure 12 shows the Dibsa truss system partially covered with roof tiles.

Figure 10: Existing flat roof prior to refurbishment

Figure 11: View along rigle line, indicative of typical truss spacing

Figure 12: Partially completed roof with tile roof covering

3.4 Capella Pin Truss

Supplier: Kingspan www.kingspanmetlcon.com

Application: This truss system is suitable for small to medium sized commercial flat-to-pitch roof conversions as well as new roof structures. The system is offered as a complete service including initial survey, structural design, support system options, roof panel options, flashings and the provision of rainwater goods through to installation on site by Kingspan approved contractors.

Product description: The system is designed and constructed using standard lightweight steel C and U sections that are bolted together on site to the required geometry. The system utilises a bespoke joint connection system that enables faster construction and the ability to jig and plumb the trusses where required (Figure 13 and 14).

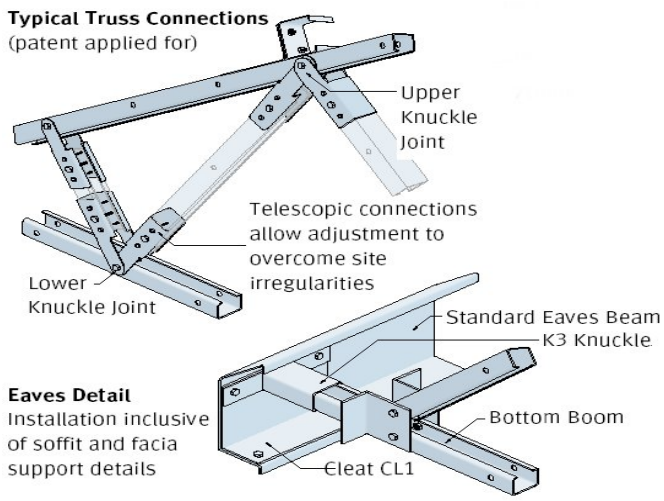

Figure 13: Typical truss connection and eaves details

Technical description: This system is used where spans do not exceed 12m without intermediate support. In situations where the existing roof can provide support this system is capable of longer spans.

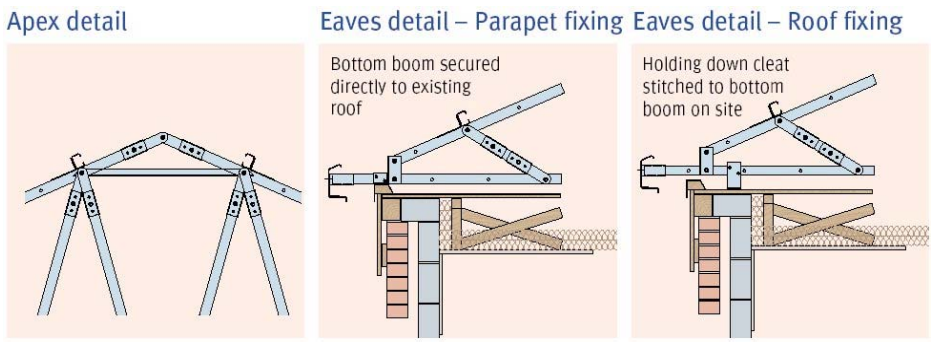

Figure 14: Typical truss apex and eaves details

Assembly: The truss system is generally supplied as a kit of parts to contractors who specialise in roof installations and refurbishment. Truss can be constructed at ground level and fixed at roof level or alternatively all the work can be carried out at roof level. Finishes are applied at height once trusses have been installed.

Finishes: Roof coverings are from within the Kingspan's range and generally assumed to be either metal tile effect or metal profile sheets. Although traditional roof tiles could be used if required.

Suitability: The system is mainly designed for new build and refurbishment i.e. over roofing. It requires structural alteration for creating room in the roof as the truss design and truss spacing limit the available space and the available headroom.

Case Studies: Refurbishment of flat roofs to pitched roofs for 15 bungalows (Figure 15), two high rise blocks (Figure 16) and a warden house on the housing estate in Leeds UK.

Figure 15: Renovation of 15 flat roofs to piched roofs using the Capella system

Figure 16: Renovation of high rise roofs using the Capella system

3.5 Capella Vierendeel Truss System

Supplier: Kingspan www.kingspanmetlcon.com

Application: This truss system is suitable for small to medium sized commercial flat-to-pitch roof conversions as well as new roof structures. The system is offered as a complete service including initial survey, structural design, support system options, roof panel options, flashings and the provision of rainwater goods through to installation on site by Kingspan approved contractors.

Product description: The design of the truss is similar to that of a conventional Vierendeel truss as shown in Figure 19.

Technical description: This system is capable of spans of up to 30m. It is constructed using MultiChannel C-shaped sections and MultiBeam Z-shaped sections (Figure 17 and 18). These sections are connected using bolted connection similar in manner to the Capella Pin System. Truss spacing ranges from 300mm upwards depending on loading.

Figure 17: MultiChannel C-sections

Figure 18: MultiBeam Z-sections

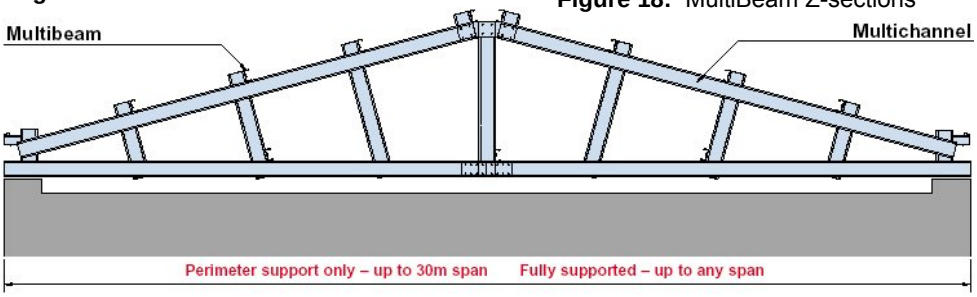

Figure 19: Truss layout and geometry

Assembly: The truss system is generally supplied as a kit of parts to contractors who specialise in roof installations and refurbishment. Truss can be constructed at ground level and fixed at roof level or alternatively all the work can be carried out at roof level.

Finishes: Roof coverings are from within the Kingspan range and generally assumed to be either metal tile effect or metal profile sheets. Although, traditional roof coverings are possible.

Suitability: The system is mainly designed for new build and refurbishment i.e. over roofing. It requires structural alteration for creating room in the roof as the truss design and truss spacing limit the available space and the available headroom.

Case Studies: As above

3.6 AyrTruss

Supplier: Ayrshire Steel Framing www.ayrshire.co.uk

Application: The Ayrshire truss system is a prefabricated off-site manufactured truss system that is suitable for over-roofing and new construction (Figure 20 and 21).

Figure 20: Ayrtruss awaiting traditional tile roof covering

Product description: The system is somewhat traditional in its approach and does not utilise advances in lightweight metal technology and joining technology. Truss geometry is similar in nature to that of timber, however due to the connection system and the thickness of the steel sections; large support free spans are possible.

Technical description: Truss depth ranges from 0.4m to 1.2m depending on application and span. The connections are formed using welded connections.

Assembly: The system is assembled off-site in a factory controlled environment, transported to site, installed at roof level and roof coverings are installed in-situ.

Finishes: A wide range of finishes are possible

Suitability: The system is mainly designed for new build and refurbishment i.e. over roofing. It requires structural alteration for creating room in the roof as the truss design and truss spacing limit the available space and the available headroom.

Case Studies:

Figure 21: Ayrtruss used in conjunction with a complete framing solution also supplied by Ayrshire

3.7 Ashjack

Supplier: Ash and Lacy Building Systems www.ashandlacy.com

Application: AshJack is suitable for use as an off-site new build solution or as part of a renovation package (Figure 25) to overcome flat roof failure

Product description: The system is a constructed using lightweight steel section. It is possible to have a continuously supported rafter design (Figure 22) or a spanning truss system as shown in Figure 23.

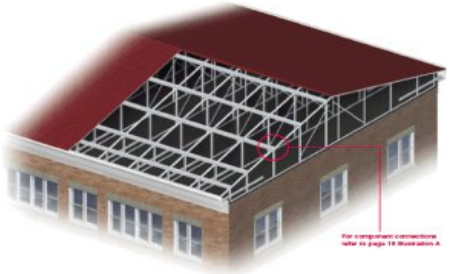

Figure 22: Examples of propped rafter (left) and curved rafter (right) over-roof conversion system

Figure 23: Example of spanning truss over-roof conversion system

Technical description: The system is able to span up to 15m with a maximum pitch of 35° and is available in traditional pitch or barrel vault (Figure 22) configuration. Connections are by made by mechanical screw fixing or bolt connections and splice connections are possible with the AshLoc (Figure 24) system if required. Spacing is dependent on imposed and dead loads assumed to be in the region of 300mm to 1200mm

Assembly: Assembly methods range from rivet fixings of lightweight steel sections or the use of a fixing-less connection system called Safeloc. The system can be pre-fabricated off-site or installed at roof level.

Figure 24: AshLoc connection system.

Finishes: All types of finishes are possible

Suitability: The system is mainly designed for new build and refurbishment i.e. over roofing. It requires structural alteration for creating room in the roof as the truss design and truss spacing limit the available space and the available headroom.

Case Studies: AshJack propped rafter over-roof conversion system, refurbishment of traditional flat roof to pitched roof during occupancy of Tottenham residences. Figure 25 shows a completed roof alongside another during roofing works.

Figure 25: AshJack system during installation.

3.8 Fusion Building Solutions

Supplier: Fusion Building Solutions www.fusionbuildingsystem.com

Application: The roof truss system is part of a total building solution for residential market.

Product description: This roofing system is based on the warm frame principle. It has proprietary shaped web and chord members. Some connection details are also unique and have patent protection.

Technical description: The system is reliant on bolted connections and has a proprietary connection system where truss members intersect; it is predominantly based on the clinched ends of the sections overlaying each other (Figure 26). Span capacity is not available. However it is assumed that the truss system is capable circa 15m spans.

Figure 26: Fusion clinched connection system

Figure 27: Fusion truss erection/installation

Assembly: The trusses are manufactured offsite, delivered to site pre-assembled and lifted to roof level for installation (Figure 27).

Finishes: A variety of finishes are possible

Suitability: The truss system is not suitable for room-in-roof due to limitation of spacing and headroom. However, of particular interest is the fusion STiF (assumed to be an acronym for 'STeel Insulated Frame) panel (Figure 28 and 29), which is steel equivalent of the timber based structurally insulated panel (SIP). This system should be capable of providing a room-in-roof solution. Also, it may be possible to adapt this system to suit the requirements of over-roofing and renovation.

Figure 28: Fusion STiF wall panels

Figure 29: Fusion STiF wall panels

Case Studies:

This development is an example of mixed residential contemporary three storeys, two bedroom apartments (Figure 30). Fusion has installed their revolutionary StIFTM Infill Panel in this development.

Construction: Fusion StIFTM external non-load bearing Infill Panel was used within a Hot Rolled Steel Framed structure (Figure 31). The infill panels are designed to resist their self weight and imposed wind loading, due to the action of masonry cladding which is tied to the studs using the Fusion wall tie system.

Figure 30: Fusion building, mixed residential contemporary three storey, two bedroom apartments

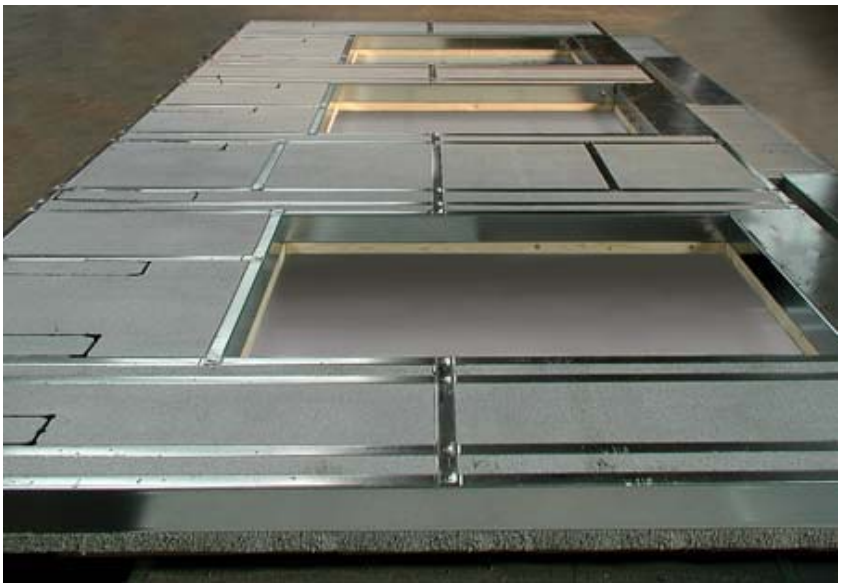

Figure 31: Fusion StIFTM external non-load bearing Infill Panel

3.9 Rosette

Supplier: Rosette Systems Ltd www.resettesystems.com

Application: The rosette system is a complete system capable of manufacturing all the components required for a lightweight steel framed structure.

Product description: The Rosette system is supplied as a system; comprising the steel forming machine, punches and presses for forming the connections and C and U sections. In addition the system is capable of forming and machining the "Bigboy" section (Figure 32) and truss system.

Figure 32: Rosette "Bigboy" section

Figure 33: Rosette Bolt tube.

Technical description: The Bigboy truss can span up to 20m with the truss spaced at 2.7m apart. The novelty of system lies with the development of a screw/boltless fixing method using the "Rosette Bolt Tube" as shown in Figure 33. The bolt tube system is aimed at reducing time needed to change tools and is also a patented product. The Rosette connection is formed using a prefabricated collar and distorting the sheet material to create a mechanical fixing with the lap as seen in Figure 34, which also shows the Rosette pressing tools etc.

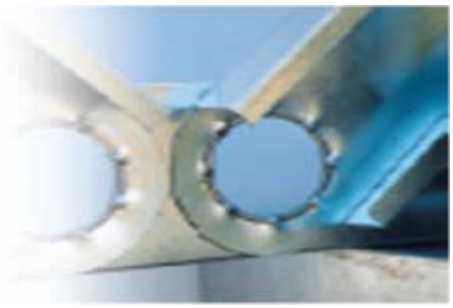

Figure 34: (left) Rosette connection, (right) Rosette connection forming press

Figure 35: Connection of perpendicular members, insertion of first Bolt Tube

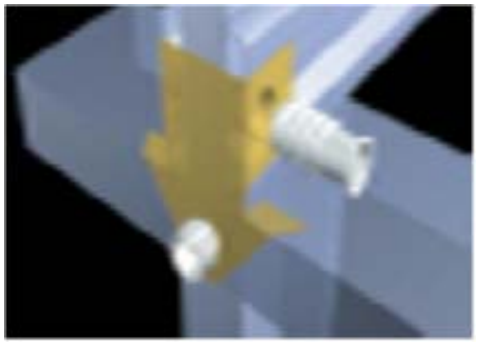

Figure 36: Connection of perpendicular members, insertion of second Bolt Tube

Figure 37: Connection with slotted bracket to aid adjustment

Figure 38: Connection of perpendicular members with multiple bolt tubes

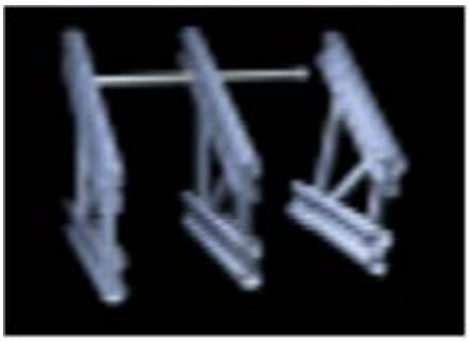

Figure 39: Rosette truss configuration with tie member

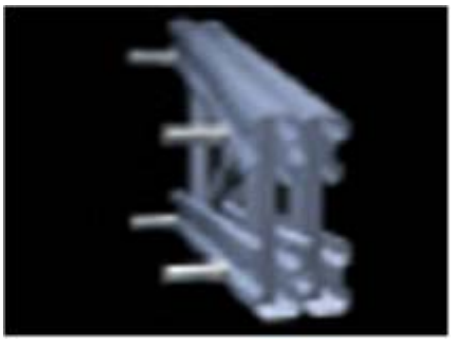

Figure 40: Bigboy section and truss with Tube Bolt locations

Assembly: Production of lightweight steel components is generally conducted off-site in production facilities and transported to site as either, components (channels etc) or building elements (trusses, panels etc). Installation on-site is dependent on the manufacturer and the supply format. Components require on site assembly, building elements are simply installed as units.

Finishes: A variety of finishes are possible

Suitability: It appears that the system is mainly designed for new build. The ability to provide a room-in-roof solution is unclear. However, akin to the other truss solutions discussed in this report the truss spacing and layout is possibly a restricting factor.

Case Studies: Schematic of the complete buildign system capable of being produced by the rosette system.

Figure 41: Components manufactured with the Rosette System

3.10 Metsec Trusses

Supplier: Metsec Plc www.metsec.co.uk

Application: Metsec has traditionally supplied off-site manufactured parallel chord trusses that utilise a unique chord section, as shown in Figure 42. Metsec specialises in cold roll-forming of metal sections. It has a host of truss solutions for new built residential, commercial and industrial application and has recently extended its remit to over-roofing.

Figure 42: Unique chord profile

Figure 43: Metsec parallel chord trusses used in roof construction

Product description: Metsec currently offers pitched trusses (Figure 43 and 44), tapered, tapered inverted trusses, curved beams (Figure 45) and curved trusses (Figure 46). These are used to create over-roofing solutions and designed to suit individual requirements.

Figure 44: Metsec pitched trusses used in a new build project

Figure 45: Metsec curved beam shown above during new construction, could also be used during renovation.

Technical description: Metsec trusses are typically welded and are capable of long spans of up to 34m.

Assembly: Metsec trusses are manufactured off site. In over-roofing scenarios, the trusses receive roof coverings on site and at height.

Finishes: Roof finishes are generally profiled sheet materials but traditional roofing tiles are possible.

Suitability: The system is mainly designed for new build and refurbishment i.e. over roofing. Like many other truss systems, the feasibility of a room-in-roof solution is restricted by the truss layout and geometry. Curved beams could be used to create a habitable space; however careful consideration must be given to the existing structure as it likely that the curved beams will exhort lateral forces upon it. If the underlying structure is able to resist the lateral and vertical loads imposed by the curved beams a habitable space is achievable using the Metsec system.

Case Studies:

Figure 46: Metsec curved truss shown above during new construction, however the curved truss is ideally suited to renovation as it could be continuously supported by existing roof.

Figure 47: Over-roofing of school using traditional truss system

3.11 Cover Structure

Supplier: Cover Structure www.coverstructure.com

Application: Cover Structure manufacture and install over-roofing and flat-to-pitch solutions to the residential and commercial sectors in the UK. The mainstay of their business activity is the over-roofing of dilapidated and aging flat roofs in schools, leisure centres and homes. The Cover Structure system is promoted as the solution to budget-sapping patch repairs.

Product description: The system is traditional in its construction without many differentiators to other systems discussed in this report. It uses standard C-sections in its construction which are connected using blind rivets and connection plates as shown in Figure 48 and 49.

Figure 48: Blind rivet construction of Cover Structure truss.

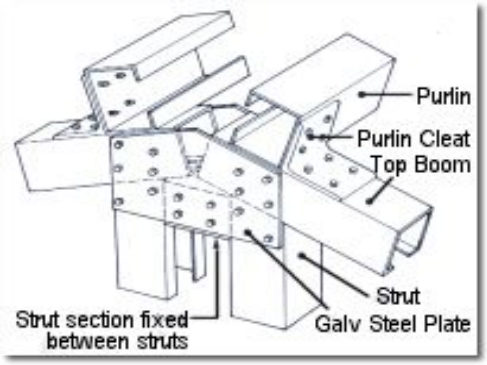

Figure 49: Plate connection system used in construction on the Cover Structure truss.

Technical description: The system is a truss based system capable of spans of up to 25m in simply supported scenarios and longer if intermediate supports are available (Figure 50). Typical truss spacing is between 1m and 1.2m.

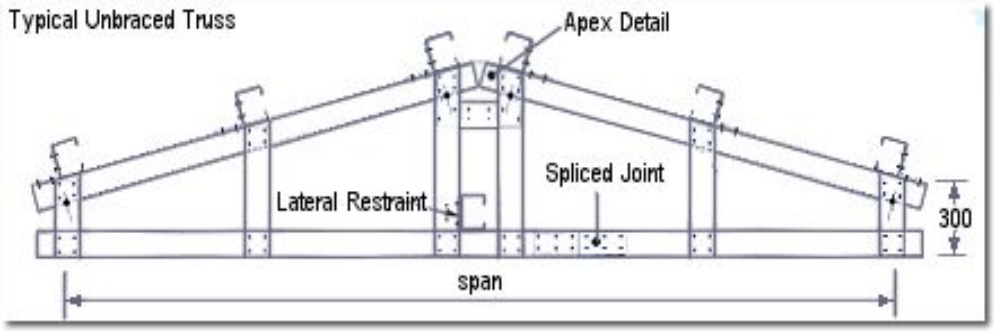

Figure 50: Typical truss detail

Assembly: Trusses are manufactured off site and the trusses receive roof coverings on site and at height.

Finishes: A variety of roof finishes are possible.

Suitability: The system is mainly designed for new build and refurbishment i.e. over roofing. It requires structural alteration for creating room in the roof, similar to other truss systems.

Case Studies:

Before and after images showing the scope of works carried out by Cover Structure are shown in Figure 51 and 52.

Figure 51: Flat-to-pitch conversion of production building

Figure 52: Flat-to-pitch conversion of production building

4. Other Products / Systems of Interest

4.1 Freeframe

The Freeframe system is similar to conventional light weight steel framing solutions in that it utilises C- and U-sections for its manufacture. The system can be used to produce lightweight steel framing and truss.

The innovative approach to the manufacturing of the system is worth mentioning. Freeform products are constructed from a continuous length of steel that has been pre-drilled with holes for the rivets used for retaining the shape of the components. This allows the rapid manufacture and jig free assembly of components and framing elements. The key to the system and the guarantee of dimensional accuracy is achieved by the precise geometry of the location and rivet holes, once they are in the correct position; it is simply a case of manipulating the profile section to the required shape (Figure 53).

The suitability of this system for the creation of habitable spaces has not been addressed because the inclusion of Freeframe within this report was aimed at addressing the innovative manufacturing process.

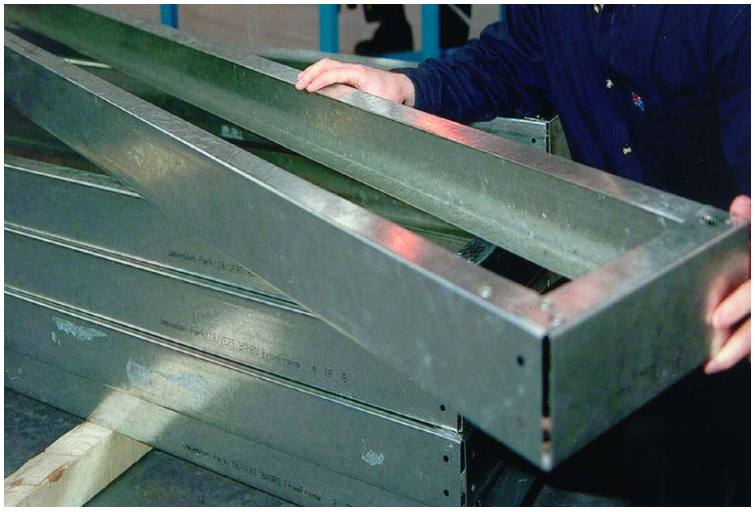

Figure 53: Banro frame element

Note: *the open edge of the nearest corner which is the end of the profile*

A combination of modular and flat pack panelised structures was used by Banro Projects for a number of Eco Homes social housing projects in the West Midlands (Figure 54), ranging from low rise warden supported housing to two and three storey family properties.

The Project used a combination of prefabricated panels and volumetric pods, both utilising the Freeframe light gauge steel panel systems. Freeframe light gauge load-bearing steel framing was incorporated into the construction of walls, floors and three dimensional modular units for bathroom or kitchens.

Figure 54: Banro Eco Home constructed using lightweight steel framing elements

4.2 AyrFrame

AyrFrame is a galvanised steel modular building system, using cold rolled steel sections to form a structural frame. The Ayrshire system is a prefabricated off-site manufactured module and panel system that is suitable for over-roofing and new construction of residential and commercial buildings. Prefabricated volumetric modules are supplied fully fitted out with internal surface finishes and serviced bathroom modules. Floors and ceilings are fabricated from lightweight steel sections in cassette format, while walls are typical of other framing systems with 300mm centre spacing.

The construction of the volumetric units is based on the AyrFrame system that is also used to fabricate the AyrTruss system described earlier within this document. Figure 55 shows an AyrFrame module constructed from proprietary cold rolled sections that are joined by welded joints for extra rigidity.

Figure 55: Room in roof system

The system is fully assembled off-site in a factory controlled environment, transported to site, installed at roof level and roof coverings are installed in-situ. A wide range of finishes are possible. This system delivers an efficient room-in-roof solution with no headroom restriction.

AyrFrame factory finished modules and panels have been recently used for hotel projects ranging from 2/3 star to 4 star quality for major Hotel chains including Post House and Holiday Inn Express; nursing homes and apartments.

4.3 Moment Frame

The system is a lightweight cold rolled sections configured to provide portal frame structures of up to 18m in width. Current applications of this system are confined to small portal frames with maximum spans of up to 18m in width with a maximum length of 54m. The combination of SwageBeams and connections provides the opportunity to utilise the portal frame design to create room in roof solutions (Figure 56).

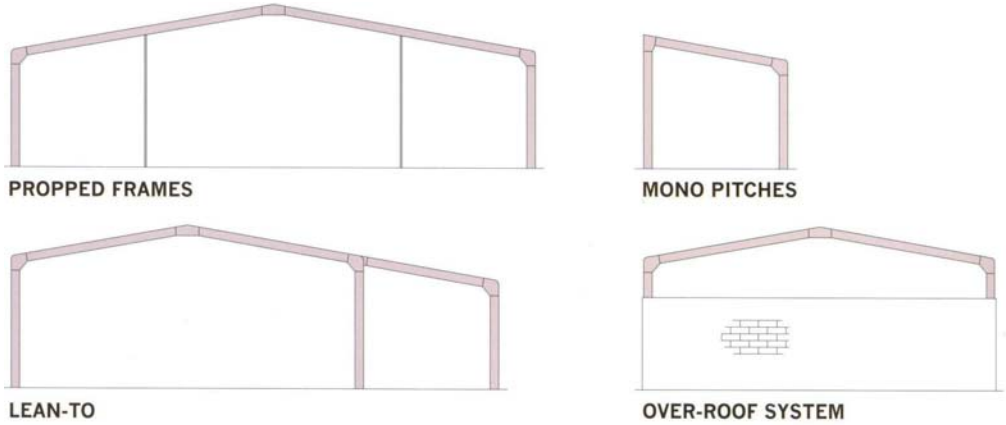

Figure 56: Details of the various framing options available, of particular interest is the over-roof system

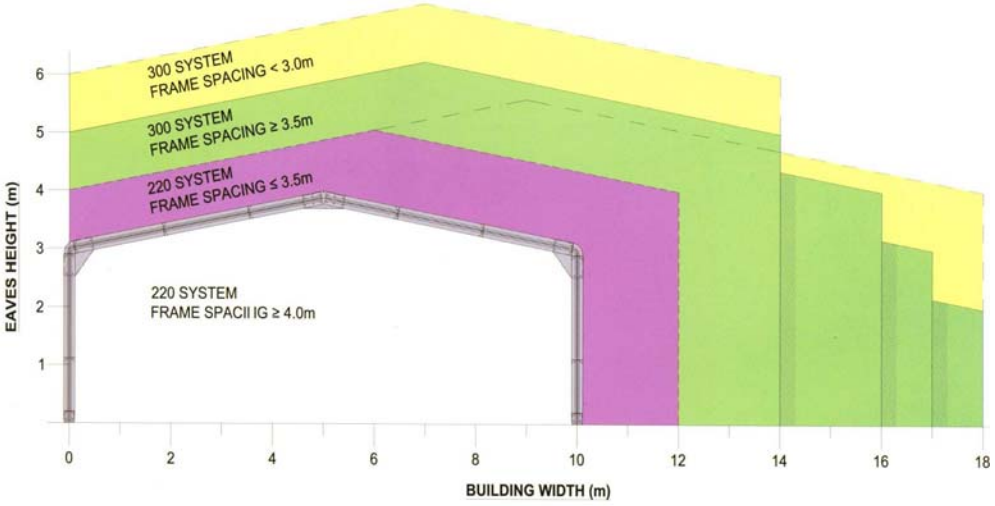

Figure 57: Typical building widths and heights offered by the system

The system represents a lightweight alternative to hot-rolled steel sections which are traditionally used for single-storey structures providing large open spaces (Figure 58). The system is based on the Ayrshire SwageBeam, a proprietary cold-rolled lightweight steel section derived from a lipped “C” section that minimises section depth whilst maximising span capabilities due to added web stiffener (Figure 59). The moment resisting capabilities of the framing system are increased by special eaves and ridge connection systems (Figure 60 and 62 respectively).

Figure 58: Typical Portal frame design and layout

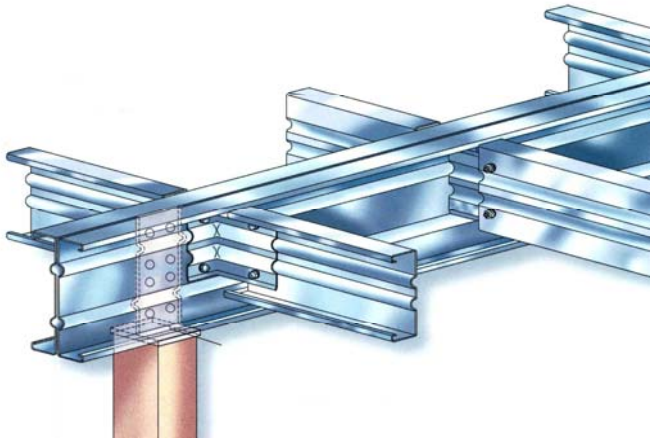

Figure 59: SwageBeam profile and typical connection details

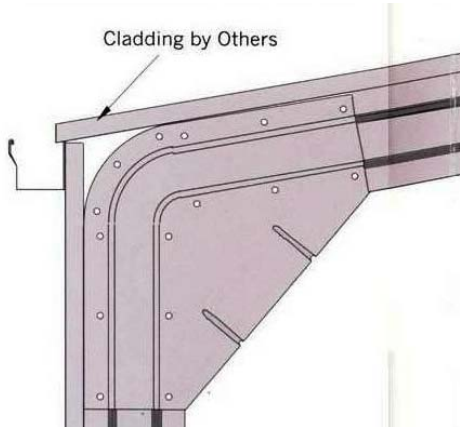

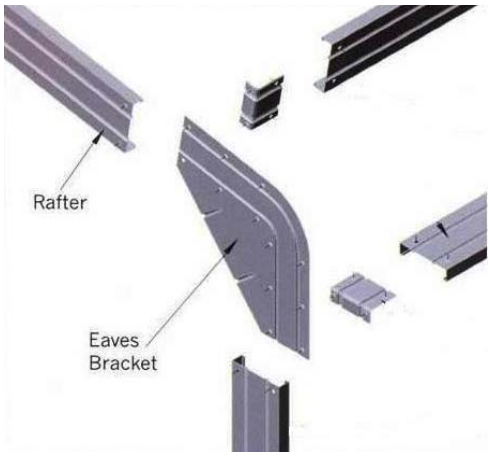

Figure 60: (left) Eaves connection stiffener. **Figure 61:** (right) Exploded view of eaves connection system and stiffener plate

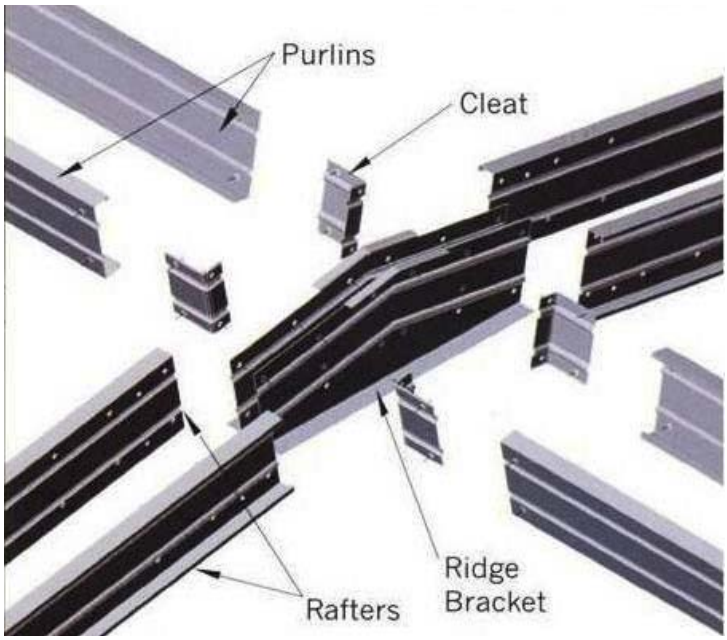

Figure 62: Exploded view of moment resisting ridge connection

Assembly of the framing system is conducted on-site and in-situ. Connections are formed with bolts, cleats and stiffening plates. Framing elements can be painted for increased aesthetics or intumescent paint can be applied to increase fire resistance. External panel finishes can comprise of either built-up or composite panel systems with a variety of surface finishes.

The system is excellent for room-in roof solutions and provides extra headroom whilst also lightweight enough to minimise loading on existing foundations.

No case study is available for room in the roof solution.

4.4 Opstalan

The Opstalan system is a timber based systems aimed at the residential market and primarily for new builds. Although this system is somewhat disparate to the aims of ROBUST, it is included in this report to highlight new or transferable technologies from outside of the light weight steel construction sector.

The system comprises of off-site manufactured timber roof panels that are constructed by infilling a timber frame with insulation and sheeting in a timber board material. These panels are then finished with the appropriate roof finish.

The area of interest is the method of installation and transportation/ delivery. The Opstalan system is delivered to site as a pair of roof panels that are hinged at ridge level and complete with all coverings and windows. The roof system is craned to roof level where the panels splay out to the required angle and rest on gable wall panels. This is shown in Figure 40, and it can be seen that installers await the roof structure from within, having gained access from the within the completed structure. From the information available it is understood that the system does not have a tension rod at the bottom of the panels similar to other panel systems in the UK. The roof structure transfers loads to the gable walls and roof plate at the perimeter/eaves level.

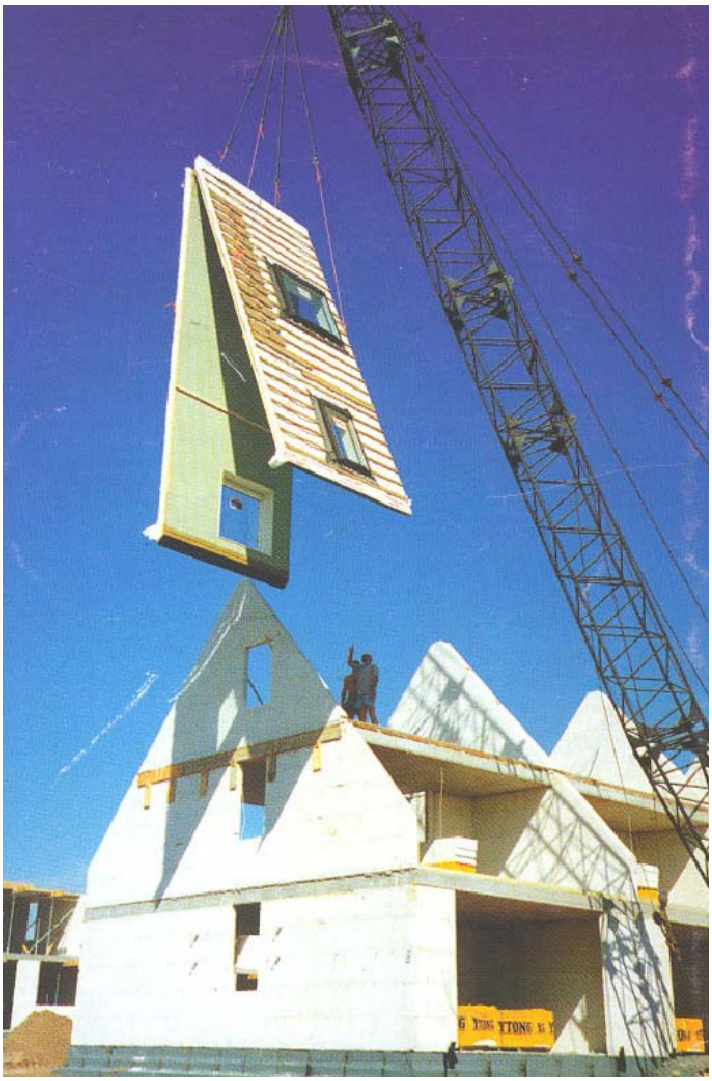

Figure 63: Opstalan roof system. Note, location of second storey level and the lack of tension strut at the bottom of the panel

This system is designed to create a habitable space within the roof void; this is clearly shown in Figure 63, by the provision of a second storey located at the midpoint of the pitch roof.

4.5 Lett-Tak

Lett-Tak is an industrial roofing system that utilises a hybrid panelised and truss configuration to enable rapid roofing on-site with approximately 1500m^2 of roofing completed per day.

The system comprises of long spanning trusses in the order of 25m and insulated composite steel sandwich panels. Transport to site is similar to profile cladding and installation does require working at height as can be seen in Figure 64.

Figure 64: Installation of Lett-Tak roof system at height. The long span trusses and composite sandwich panels are examples of transferable systems to the residential and renovation sectors

4.6 Smartroof

This system is typical of the structural Insulated Panel (SIP) systems which are currently more energy efficient than steel intensive systems. However these systems are limited to use in low-rise residential buildings up to 3-4 storeys. SIP systems are not generally used in renovation, over-roofing scenarios. However they provide a relatively simple solution to the room-in-roof requirement.

In the case of Smartroof, the system does not require rafters or trusses; rather the loads are transferred to gable walls and wall plates at eaves level. Each panel, which is constructed in a similar manner to the Opstalan system, has a tongue and groove arrangement longitudinally and interlocks with the panels either side to form a contiguous roof panel. Figure 65 shows the installation of a Smartroof system.

Figure 65: Room-in-roof scenario fulfilled with the use of timber SIP

4.7 Europe TwinTile / Kingspan Panel Systems

Europe TwinTile is a factory pre-engineered lightweight steel intensive replacement for traditional clay, concrete or slate roofing tiles. The tiles are suitable for use with timber and steel roof structure for new build and flat-to-pitch support structure and framing systems. Kingspan has also launched its roof tiles insulated panel system which is suitable for new building and refurbishment of residential, commercial and industrial buildings. The external layer is a high performance polymer coated 0.7mm thick steel and internal 0.4mm thick steel with PU foam sandwiched between the two steel skins. The overall thickness ranges from 85 to 140mm thick with U-value between 0.45 and 0.20 W/m2K respectively. The range of traditional tile replacement systems available from TwinTile covers various applications; products include TwinTile, Thermo TwinTile, and MetalSlate.

The TwinTile system is the original product of which the rest are derivatives. It is a two sheet Alu-Zinc (0.3mm) steel plate that is formed to replicate the look of individual roof tiles, but it has multiple tile profiles per unit as shown in Figure 66. The TwinTile has a polymer foil between the sheets to aid the production process and aid thermal resistance.

Figure 66: Roof covered with steel intensive TwinTile system

The Thermo TwinTile is a derived system of the TwinTile that has the added advantage of integral bonded thermal insulating foam, shown in Figure 67. This system is similar to a composite sandwich panel other than having a heavier profile.

Figure 67: TwinTile installtion process and view of thermal insulation

4.8 Cool Roof Tiles

Rising temperature resulting from urban heat island effect and global warming is a major challenge. Passive cooling techniques for reducing urban temperature and building internal heat gain to improve user comfort are imperative. Technological developments such as green roof, ground and convective cooling and, ventilation have proven extremely efficient in decreasing the need for mechanical cooling and improving indoor environmental conditions.

A recent development in the field of solar and heat protection is the cool roof system, which is the use of highly reflective coating to reduce surface temperature and internal heat gain. A cool roof has a higher solar reflectance (≥ 0.7) and higher thermal emittance (≥ 0.75) than a non-cool roof[18]. In simple terms, a cool roof reflects and emits the majority of the sun's heat instead of transferring it into the building. "Coolness" is measured by two properties, solar reflectance and thermal emittance[19]. Both properties are measured from 0 to 1 and the higher the value, the "cooler" the roof. Unlike conventional roofs, cool roofs stay at or near ambient temperatures even on the hottest summer day.

The schematic presentation of heat transfer through a roof is shown in Figure 68. The surface temperature of a cool roof is up to 15°C lower when compared to a conventional material of the same colour[20]. Achieving this type of drop in roof surface temperature will reduce the overall heat gain through the roof and reduce a building's annual cooling loads.

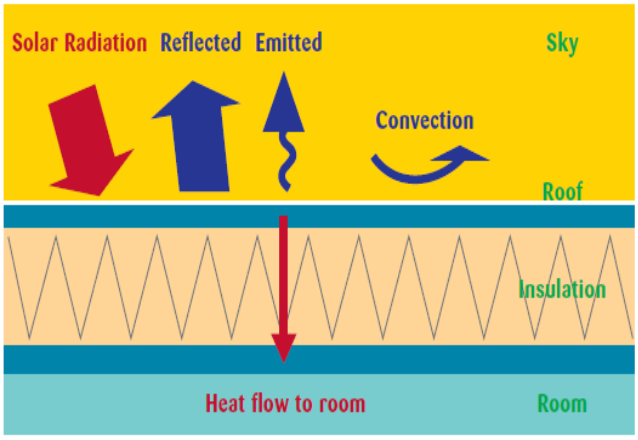

Figure 68: Heat transfer through roof[19]

Cool coating technology is widely used in the USA and Australia on varieties of renovation and new build residential, commercial and industrial roof surfaces such as metal, clay and concrete tiles. The coating can be applied offsite or in-situ as shown in the Figures 69 & 70. In this application, the roof has the same visual appearance, but is much cooler. Thus it is possible to have relatively dark-coloured roofs with relatively "cool" properties.

Figure 68: Typical Cool Roof Spray Installation[19]

Figure 70: Typical Cool Roof Spray Installation on clay tiles[19]

4.9 Urban Roof

Corus, in partnership with BASF has recently launched a new steel profile coated with the cool roof system called “Corus Colorcoat UrbanTM”, designed for the sustainable urban buildings. The product has a range of tonal colours suited for the urban fabric and a choice of variety of profiles to facilitate greater design freedom. The product is suitable for all roofing applications, both new build and refurbishment.

Colorcoat Urban™ is a low carbon roof material and it is 100% recyclable. The roof system has also undergone and passed stringent testing to BS6920 ‘Suitability of non metallic products for use in contact with water intended for human consumption’, supporting its use for rainwater harvest systems. The roof system facilitates simple, effortless and aesthetic integration of photovoltaic, solar thermal, passive solar heat collection and/or green roofs, all of which are intended to enable the designer to achieve even the most stringent of forthcoming legislation.

Colorcoat Urban™ was incorporated on the recently opened BASF Creative Energy House (Figure 71) at the University of Nottingham, a sustainable housing project focusing on energy efficiency and affordability, using an array of innovative and sustainable materials.

Figure 71: Corus Colorcoat UrbanTM on the roof of BASF Creative Energy House

5. Related Research in Europe

5.1 Prefabricated Systems for Low Energy Renovation of Residential Buildings

This project is highly relevant to ROBUST project particularly WP 4, though not material specific. The following are the extract from the project brief[23]:

Project Scope

The project focuses on typical apartment blocks representing approximately 40 % of the European dwelling stock. However, appropriate single family homes are not excluded. The project concentrates on:

- Minimising the primary energy consumption (in the range of 30-50 kWh/(m2·year) for heating, cooling and hot water, per gross floor area),
- Optimising the integration of solar energy use,
- Increasing living comfort by better space use,
- Assuring good thermal and acoustical comfort, good indoor air quality and daylighting conditions,
- Assuring a fast, high quality and cost-effective construction process.

Project Objective

The objectives are the development and demonstration of an innovative whole building renovation concept for typical apartment buildings based on:

- Prototype, prefabricated roof systems with integrated HVAC, hot water and solar systems,
- Highly insulated envelopes with integrated new distribution systems for heating, cooling and ventilation.

Advantages

- Achieving energy efficiency and comfort for existing apartment buildings comparable to new advanced low energy buildings;
- Optimised constructions and quality and cost efficiency due to prefabrication;
- Opportunity to create attractive new living space in the prefabricated attic space and by in-corporating existing balconies into the living space;
- A quick renewal process with minimised disturbances for the inhabitants.

Project Subtasks

The project will be structured according to the following five Subtasks:

A: Concept definition and specification		
B: Integrated roof systems	C: HVAC and solar systems	D: Façade elements
E: Monitoring and dissemination		

Project Status

The project started in January 2007 and will finish end of June 2010. The last working meeting was held in April 7-9, 2008 in Munich (Germany), while the next working meeting is planned for October 20-22, 2008 in Belgium.

Participants

- Portugal: University of Minho / Porto University
- Austria: AEE - Institute for Sustainable Technologies
- Belgium: Arcelor Research Centre Liege, University of Liège
- France: Saint-Gobain Insulation, Centre Scientifique et Technique du Bâtiment CSTB
- Sweden: Lunds tekniska högskola / Christer Nordström Architects
- Germany: Fraunhofer-Institute for Building Physics
- Czech Republic: ENVIROS / Brno University of Technology
- The Netherlands: Cauberg-Huygen Consulting Engineers
- Switzerland: Empa / HS Luzern / FHNW Basle

Operating Agent

The contact person on behalf of Swiss Federal Office of Energy is:
Mr Mark Zimmermann,
EMPA-ZEN,
Überlandstrasse 129,
CH 8600 Dübendorf, SWITZERLAND
Tel: +41 (0) 44 823 4118
Fax: +41 (0) 44 823 4009
Email: mark.zimmermann@empa.chmark.zimmermann@empa.ch

6. Conclusion and Recommendation

This report provides an extensive review of the state of the art of various systems, both steel intensive (lightweight steel) and other material to facilitate knowledge transfer. The roof systems were also reviewed in terms of applications and capability in creating a habitable space, over roofing for both refurbishment and new build scenarios. For completeness, a relevant ongoing research project in Europe was briefly reviewed.

The breadth of the systems reviewed (Table 1) can be broadly categorised as:

- Panelised lightweight steel trusses
- Panelised composite lightweight steel panel or structural insulated panel (SIP)
- Modularised lightweight steel
- Moment resisting lightweight steel frame
- Novel roof tile/profile systems

The main findings of the review were that the majority of the steel intensive solutions in the market are mainly geared toward new build and refurbishment of existing building in terms of over roofing and conversion of flat-to-pitch roofs. These systems are mostly panelised lightweight steel trusses. The configurations of the steel trusses reviewed are based on traditional truss systems (see below) and constructed using Top-Hat section, C-section, U-section and/or proprietary sections. The reason for the wide spread use of the traditional truss configuration is the benefit of longer span capability compared to timber trusses. However, the configuration and spacing prohibit the provision of a room-in-roof solution.

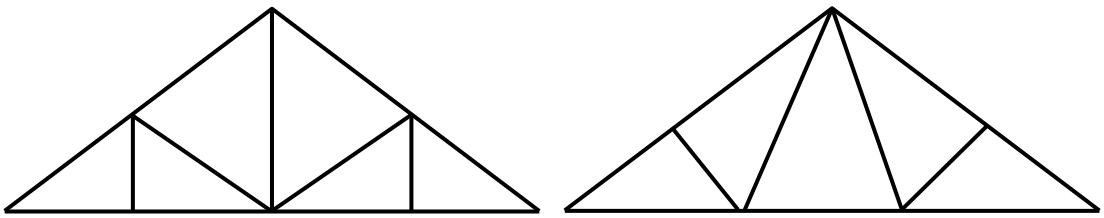

Figure 72: Typical traditional truss systems available in the market

Technically all the modular manufacturers across Europe should be able to provide fully furnished, steel intensive habitable roof systems for new build. One example is noted in this review. However, there is no steel solution for retrofitting of millions of existing timber roof trusses to create habitable roof space. There is a need for market research into the reasons for sparse availability of steel systems for creation of habitable roof solution for refurbishment application.

Other non-truss systems have merits in terms of creating a habitable space for refurbishment. Systems such as the SmartRoof and Optalan SIP timber systems offer the largest and most efficient use of roof space for habitation. The use of steel structural insulated panels has been advocated and marketed by Fusion Building Solutions. There are opportunities for knowledge transfer in the use of composite timber cross walls for creating habitable roof.

Concerning relevant research project, collaboration is strongly recommended with the low energy renovation project identified in Section 5 to avoid duplication of efforts and reinventing the wheel.

Reference

1. www.corus-hipoint.com
2. www.nuconsteel.com
3. www.gustrussfl.com
4. www.dibsa.co.uk
5. www.kingspanmetlcon.com
6. www.ayrshire.co.uk
7. www.ashandlacy.com
8. www.fusionbuildingsystem.com
9. www.resettesystems.com
10. www.metsec.co.uk
11. www.banro.co.uk
12. www.coverstructure.com
13. www.opstalan.nl
14. www.lett-tak.no
15. www.smartroof.co.uk
16. www.twintile.be
17. www.kingspanpanels.com/Products/Insulated-Roof-Systems/KS1000-RT---Roof-Tile/Product-Information/Applications.aspx
18. Cool Roof Rating Council (CRRC): www.coolroofs.org
19. Pacific gas and electric company, Cool Roof Design Brief, www.energydesignresources.com
20. Lawrence Berkeley National Laboratory, Heat Island Projects, http://eetd.lbl.gov/HeatIsland/PROJECTS/
21. High Albedo (Cool) Roofs, Codes and Standards Enhancement (CASE) Study, Pacific Gas and Electric Company, November 17, 2000
22. Urban Roof: http://www.colorcoat-online.com/en/news/colorcoat_urban
23. Prefabricated Systems for Low Energy Renovation of Residential Buildings: http://www.empa-ren.ch/A50.htm